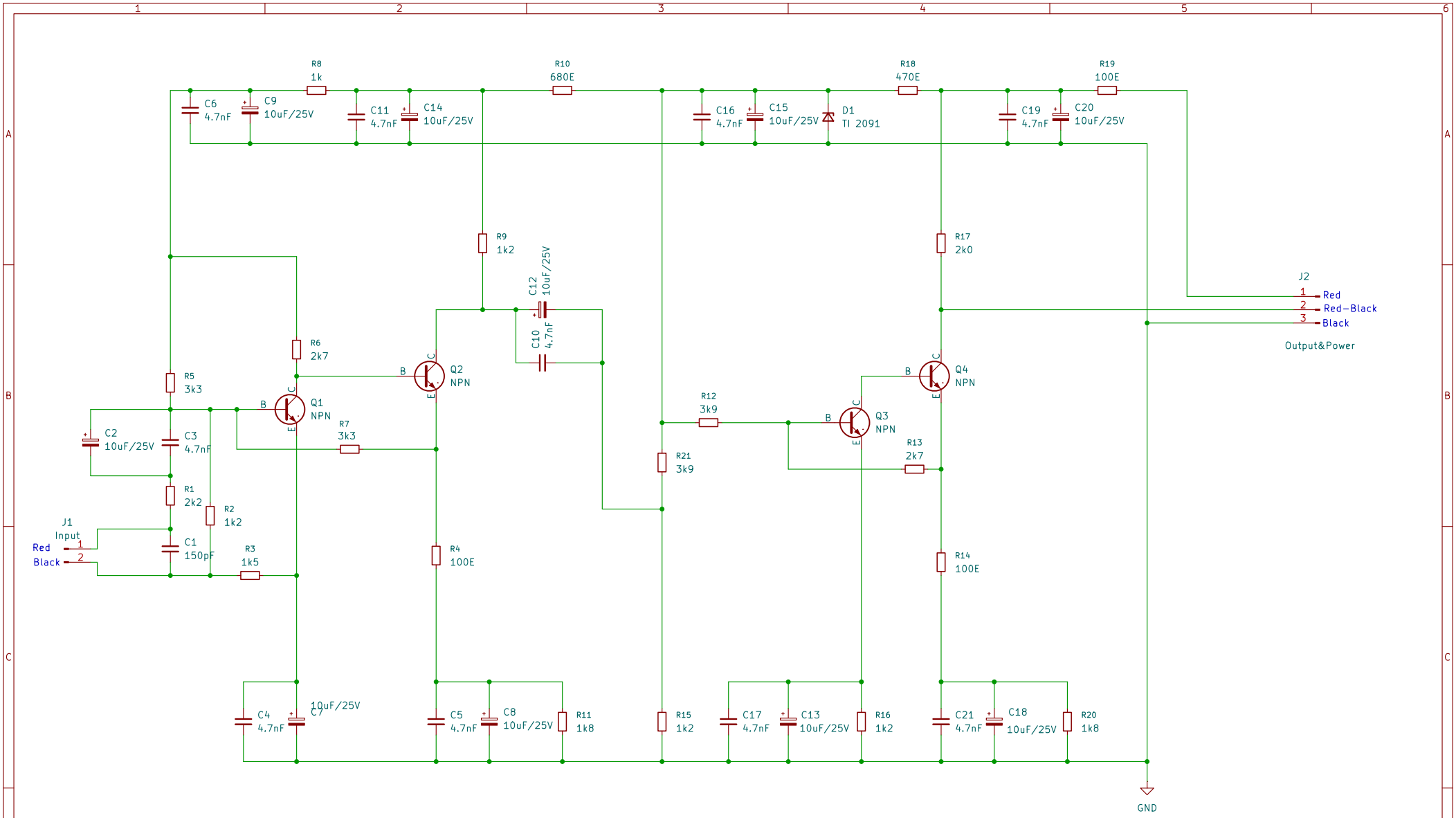

Redrawn by F.J. Kraan

Olivetti

Sheet: /

File: P101DelayLineAmp.kicad_sch

Title: P101 Delay Line Amplifier

Size: A4	Date: 2026-02-03	**Rev: 0.95**
KiCad E.D.A. 9.0.4		Id: 1/1